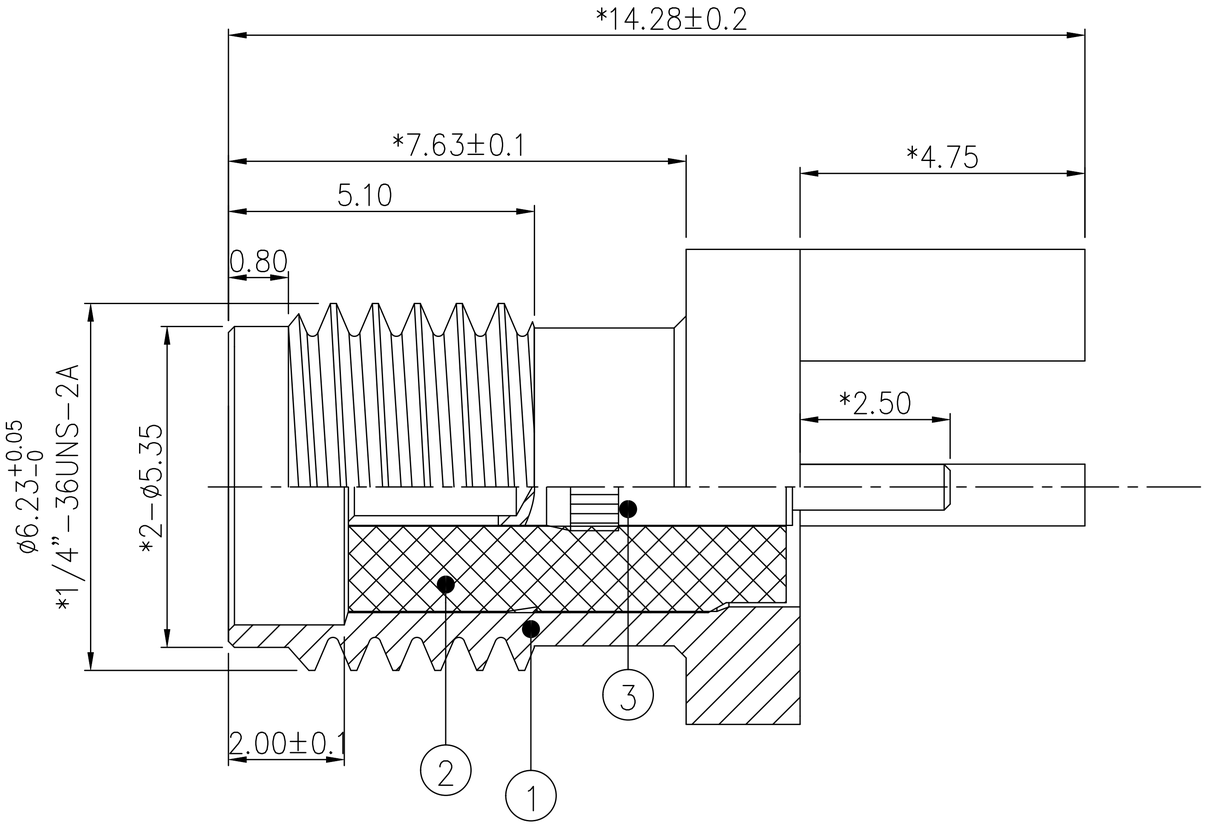

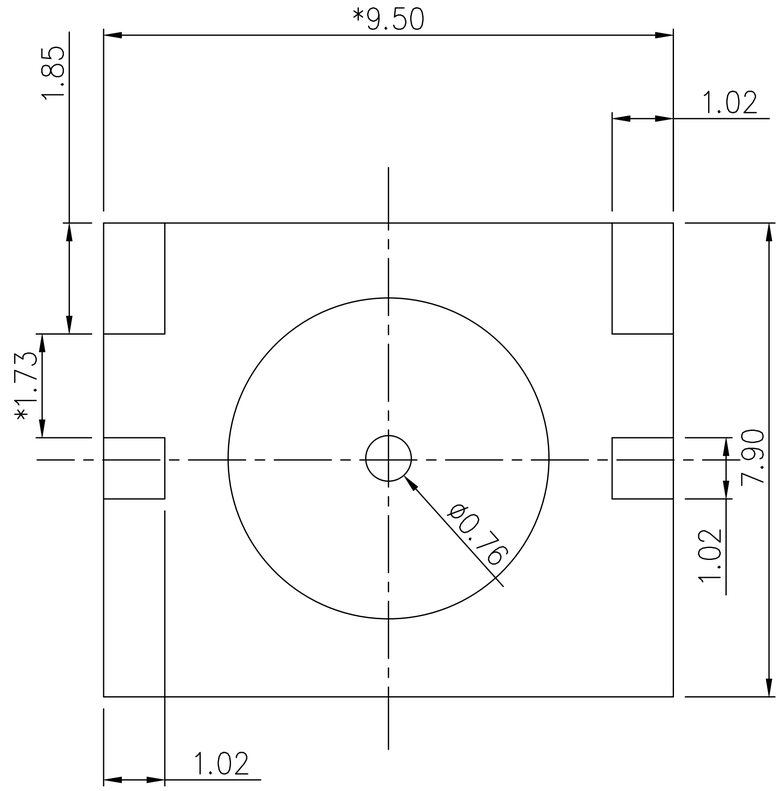

1. Electrical Characteristics

1.1 Impedance: 50 O H M

1.2 Working Frequency: D C-3 G H Z

1.3 S.W.R.: ≤ 1. 5

1.4 Working Voltage: 3 35 5 V/m A X

1.5 Insulation Resistance: 50000M O H M

1.6 Contact Resistance: center contact: 3 M o h M

1.7 External Contact: ≤ 2 m O h m

Model No.: SMA-KE-P902

Material: Brass base, with gold-plated surface

SMA-KE straight head (180 degrees) - external screw type, internal pin, half thread – P type offset 4 angles

2. Work Environment

2.1 Operating Temperature range: -55 °C ~ + 125 °C

2.2 Salt Spray Test: 48 H

部件序号	部件品名/规格	材料	零件编号	用量
3	PIN针 OD1.40*10.00	C3602 镀金3u"	SMA014010G−1858	1
2	绝缘体 OD4.18*7.20	PTFE 白色	SMA418072I−1751	1
1	螺牙本 SQ9.50*14.28	C3604 镀金1u"	SMA951428G−1460	1

DreamLNK® 深圳市骏晔科技有限公司 SHENZHEN DREAMLNK TECHNOLOGY CO., LTD

Tolerance 未注公差:
.X ±0.2
.XX ±0.10
.XXX ±0.05
未注角度公差:±1°

		Part Name.品名	SMA-KE-P901	
Material.材				
Finish. 理				
Scale.比例	1:1	Draw .	Check.校	App.核准
REV.版本/次	A/0	19.01.01	19.01.01	19.01.01
Unite. 位:	mm			